MAXIMUS MLX

Flameproof illuminator

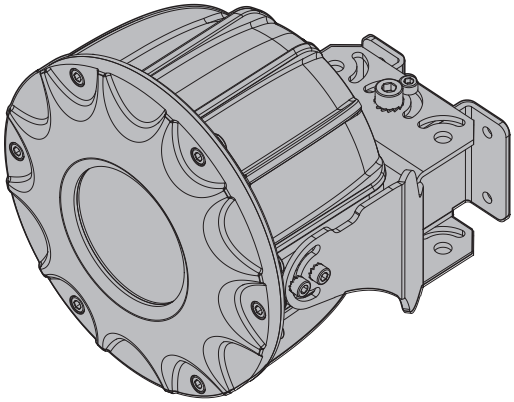

EN English - Instruction manual

IT Italiano - Manuale di istruzioni

FR Français - Manuel d'instructions

DE Deutsch - Bedienungsanleitung

RU Русский - Руководство по эксплуатации

PT Português - Manual de instruções

KO 한국어 - 지침 설명서

MAXIMUS MLX

Flameproof illuminator

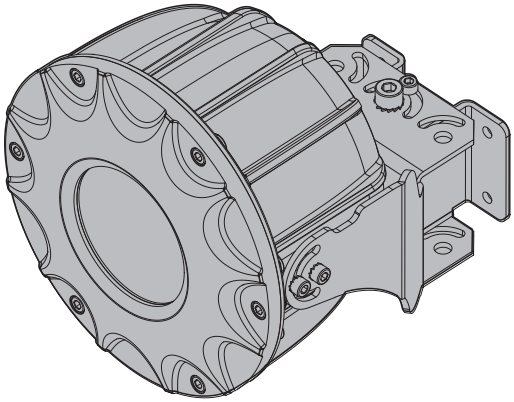

EN English - Instruction manual

Contents

1 About this manual

Read all the documentation supplied carefully before installing and using this product. Keep the manual in a convenient place for future reference.

1.1 Typographical conventions

DANGER!
Explosion hazard.
Read carefully to avoid danger of explosion.

DANGER!
High level hazard.
Risk of electric shock. Disconnect the power supply before proceeding with any operation, unless indicated otherwise.

DANGER!
Emission of visible light or infrared.
Can be harmful for eyes. Pay attention to the provided indications.

CAUTION!
Medium level hazard.
This operation is very important for the system to function properly. Please read the procedure described very carefully and carry it out as instructed.

INFO
Description of system specifications.
We recommend reading this part carefully in order to understand the subsequent stages.

Underlined titles
Information is subject to certifications.

2 Notes on copyright and information on trademarks

The mentioned names of products or companies are trademarks or registered trademarks.

ONVIF® is a trademark of Onvif, Inc.

3 Safety rules

DANGER!
Explosion hazard.
Read carefully to avoid danger of explosion.

- Installation and maintenance of the appliance must be carried out by specialist technical staff in compliance with the applicable reference standard EN/IEC 60079-14, EN/IEC 60079-17 and national standards.
- Do not open the device when powered and in explosive atmosphere.
- Use appropriate tools for the installation. The particular nature of the site where the device is to be installed may mean special tools are required for installation.
- Make all connections, installation and maintenance work in a non-explosive atmosphere.
- The equipotential connection is mandatory to avoid the risk of ignition of products installed in potentially explosive environments.
- Before powering the product in an explosive atmosphere, ensure it is closed correctly.
- The temperature of the surfaces of the device is increased by exposure to direct sunlight. The surface temperature class of the device was determined only with ambient ambient temperature, without taking into consideration direct sunlight.

- Make sure that all the equipment are certified for the application and for the environment in which they will be installed.
- Any change that is not expressly approved by the manufacturer will invalidate the guarantee.

DANGER!
High level hazard.
Risk of electric shock. Disconnect the power supply before proceeding with any operation, unless indicated otherwise.

- Make sure that the power is off when installing or carrying out maintenance, with the circuit-breaker open.
- A power disconnect device must be included in the electrical installation, and it must be very quickly recognizable and operated if needed.
- The electrical system to which the unit is connected must be equipped with a 10A max automatic bipolar circuit breaker. The minimum distance between the circuit breaker contacts must be 3mm (0.1in). The switch must be equipped with protection against overcurrent (circuit breaker).
- The device can only be considered to be switched off when the power supply has been disconnected and the connection cables to other devices have been removed.
- Be careful not to use cables that seem worn or old.
- All the cables must comply with IEC60332-1-2, IEC 60332-1-3 and IEC/EN60079-14.
- When commencing installation make sure that the specifications for the power supply for the installation correspond with those required by the device.
- For continued protection against risk of fire, replace only with same type and rating of fuse. Fuses must be replaced only by service personnel.
- This equipment is not suitable for use in locations where children are likely to be present.

DANGER!
Emission of visible light or infrared.
Can be harmful for eyes. Pay attention to the provided indications.

- Do not stare at the lamp when on. Can be harmful for eyes.
- CAUTION! The infrared LED illuminator emits high-intensity visible light. In compliance with standard EN62471/IEC62471, the photobiological safety assessment has classified the device in Risk Group 2, where it exceeds the values of the Exempt Group. The risk linked to the observer depends on how the product has been installed and is used. For installation, follow the instructions in this manual. Do not look directly at the illuminator using optical lenses. Exposure hazard values (EHV): 29s. Hazard distance (HD): 200mm.
- CAUTION! The white light LED illuminator emits high-intensity visible light. In compliance with standard EN62471/IEC62471, the photobiological safety assessment has classified the device in Risk Group 2, where it exceeds the values of the Exempt Group. The risk linked to the observer depends on how the product has been installed and is used. For installation, follow the instructions in this manual. Do not look directly at the illuminator using optical lenses. Exposure hazard values (EHV): 27.2s. Hazard distance (HD): 200mm.

CAUTION!
Medium level hazard.
This operation is very important for the system to function properly. Please read the procedure described very carefully and carry it out as instructed.

- Make sure that the installation complies with local regulations and specifications.
- Make connections and tests in the laboratory before carrying out installation on site.
- Check that the power supply socket and cable are adequately dimensioned.
- Use suitable cables that can withstand the operating temperatures.
- All disconnected cables must be electrically isolated.
- The product can be installed in any position.
- Make sure the product is to be secured to building before operation.
- The manufacturer declines all liability for damage to any of the apparatus mentioned in this handbook, when resulting from tampering, use of non-original spare parts, installation, maintenance and repairs performed by non-authorised, non-skilled personnel.
- Only use original VIDEOTEC spare parts. Strictly adhere to the maintenance instructions attached to each replacement kit.
- For technical services, consult only and exclusively authorized technicians.
- This product must only be repaired by suitably trained personnel or under the supervision of VIDEOTEC personnel in accordance with the foreseen terms and conditions: IEC/EN60079-19.
- TNV-1 installation type. The installation is type TNV-1, do not connect it to SELV circuits.
- Handle the product with care to avoid accidental contacts, sharp edges and corners.

INFO
Description of system specifications.
We recommend reading this part carefully in order to understand the subsequent stages.

- Before proceeding with installation, check the supplied material to make sure it corresponds to the order specification by examining the identification labels.
- The equipment is intended for installation in a Restricted Access Area by specialist technical staff.
- The manufacturer declines all responsibility for any damage caused by an improper use of the appliances mentioned in this manual. Furthermore, the manufacturer reserves the right to modify its contents without any prior notice. The documentation contained in this manual has been collected and verified with great care. The manufacturer, however, cannot take any liability for its use. The same thing can be said for any person or company involved in the creation and production of this manual.
- Since the user is responsible for choosing the surface to which the unit is to be anchored, we do not supply the fixing devices for attaching the unit firmly to the particular surface. The installer is responsible for choosing fixing devices suitable for the specific purpose on hand. Use methods and materials capable of supporting at least 4 times the weight of the device.

- For all maintenance interventions, we recommend you return the product to the laboratory that will perform all required operations.
- To comply with the main supply voltage dips and short interruption requirements, use a suitable Uninterruptible Power Supply (UPS) to power the unit.
- To feed the product use a safety transformer and/or a voltage isolated power supply with the appropriate characteristics. The characteristics of output power must not exceed the following values. Supply voltage: 24Vac (±10%) or 24Vdc (±5%).
- In the case of a 24Vac power supply, you must provide for adequate separation from the AC power supply line using double or reinforced insulation between the main power supply line and the secondary circuit.

4 Product description and type designation

The flameproof illuminator was designed for installations in potentially explosive environments made of AISI 316L, shot peened and electro-polished stainless steel. The illuminator can be powered 24Vac, 24Vdc or using an Ethernet (PoE+) cable. The illuminator is equipped with a 1/2" NPT input. The illuminator has an IP66/IP68/IP69 level of protection and can be installed, according to the class, in an ambient with temperatures that vary between -40°C up to +70°C.

4.1 Product overview

The main parts of the product are illustrated below.

01. Fastening support.
02. Reinforcement support.
03. Housing support.
04. Spacer.
05. M8x80 screw.
06. Housing.

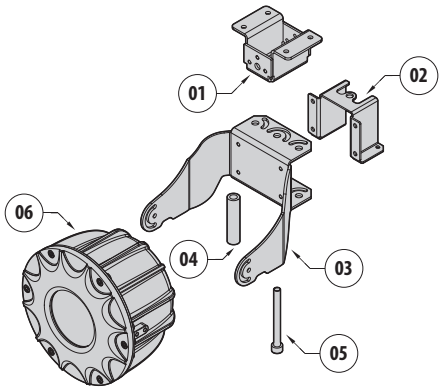

Fig. 1

4.2 Range of use

Use of the unit is defined in a fixed station to light zones with a potentially explosive atmosphere classified 1-21 or 2-22.

The unit has been built and certified in compliance with directive 2014/34/UE and with the international standards IECEX, which define its range of application and minimum safety requirements.

4.3 Specific use conditions

The external surface of the product must never be covered by more than 5 mm of dust.

To avoid accumulation of electrostatic loads during cleaning, the device must be cleaned using a damp cloth.

Ambient temperature and surface temperature - see the instructions.

Contact the manufacturer for information on the dimensions of the flameproof joint.

4.4 Gas Group, Dust Group and Temperatures

The device is certified for group IIB (Gas) and group IIIC (Dust).

Ambient temperature: -40°C/+55°C or +70°C.

TEMPERATURE CLASS	MAXIMUM AMBIENT TEMPERATURE
T6 / T85°C	+55°C
T5 / T100°C	+70°C

Tab. 1

4.5 Cable entry

All cable glands shall be Ex certified, as appropriate, with protection type "db" and "tb", suitable for the conditions of use and installed correctly.

When conduit is used, a suitable Ex certified stopping box shall be used, as appropriate, with protection type "db" and "tb", suitable for the conditions of use and installed correctly.

The stopping box must be fitted within 50mm (1.97in) from the enclosure entry.

The cable entry temperatures are specified in the marking.

To maintain the IP level of product use cable glands with appropriate IP level and apply to threads a sealant compliant with standard IEC/EN60079-14.

4.6 Product marking label

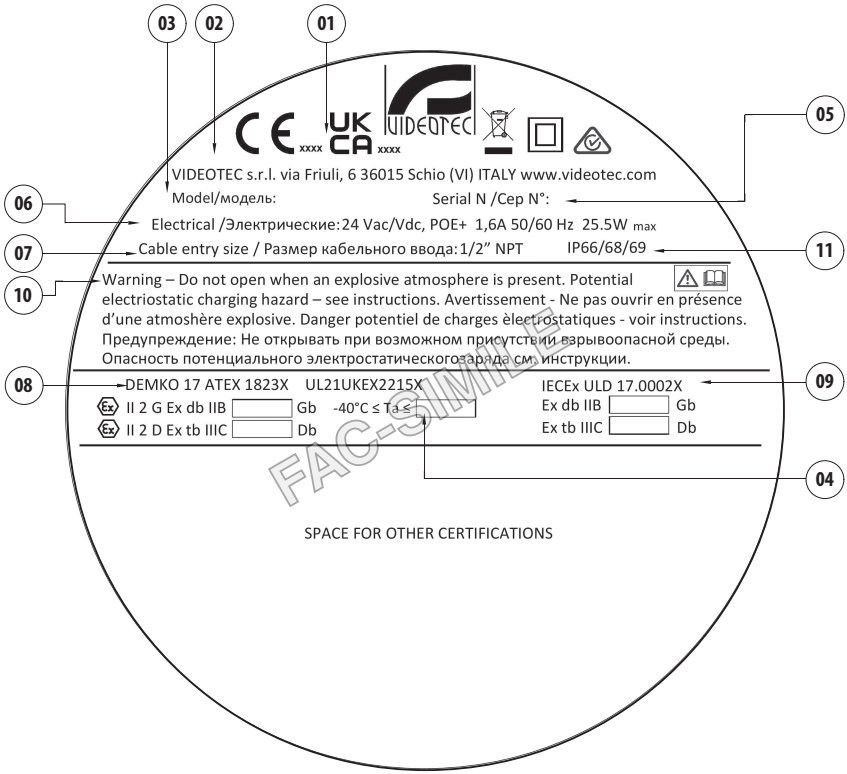

Fig. 2

1. The number of the accredited body that provides the quality assessment.
2. Manufacturer's name and address.
3. Model.
4. Ambient temperature of use.
5. The serial number consists in 12 numeric characters, the second and third digits define the last two numbers of the year of manufacture.
6. Electrical characteristics (voltage V, frequency Hz, current A, power W).
7. Type, size and number of cable entries
8. ATEX marking. The Class temperature depends on the electronics installed inside and the ambient temperature.
9. IECEx marking. The Class temperature depends on the electronics installed inside and the ambient temperature.
10. Warnings.
11. IP protection degree.

4.7 For UL/CSA standard reference only.

The flameproof joints are not intended to be repaired.

In the USA, the National Electrical Code (NEC) and in Canada the Canadian Electrical Code (CEC) apply to electrical equipment used on hazardous industrial premises. These Codes contain the installation regulations for electrical facilities in all areas and refer to a number of further standards of other institutions with specifications for the construction and installation of suitable equipment.

Important safety instructions

WARNING: A SEAL SHALL BE INSTALLED WITHIN 50 mm OF THE ENCLOSURE.
AVERTISSEMENT: UN SCELLEMENT DOIT ÊTRE INSTALLÉ À MOINS DE 50 mm DU BOÎTIER.

WARNING: DO NOT OPEN WHEN EXPLOSIVE ATMOSPHERE IS PRESENT.
AVERTISSEMENT - NE PAS OUVRIR EN PRÉSENCE D'UNE ATMOSPHÈRE EXPLOSIVE

WARNING: POTENTIAL ELECTROSTATIC CHARGING HAZARD – SEE INSTRUCTIONS.
AVERTISSEMENT - DANGER POTENTIEL DE CHARGES ÉLECTROSTATIQUES - VOIR INSTRUCTIONS

CABLE ENTRY AND BRANCHING POINT TEMPERATURE LA TEMPÉRATURE DE L'ENTRÉE DE CÂBLE ET DU POINT DE BRANCHEMENT	
Ambient/Ambiant	**Cable/Câble**
+45°C	+78.5°C
+55°C	+88.5°C
+70°C	+103.5°C
Use suitable cable and cable glands. Utilisez le câble et les presse-étoupes appropriés.	

NEMA Types: TYPE 4X, TYPE 6P

Marking label

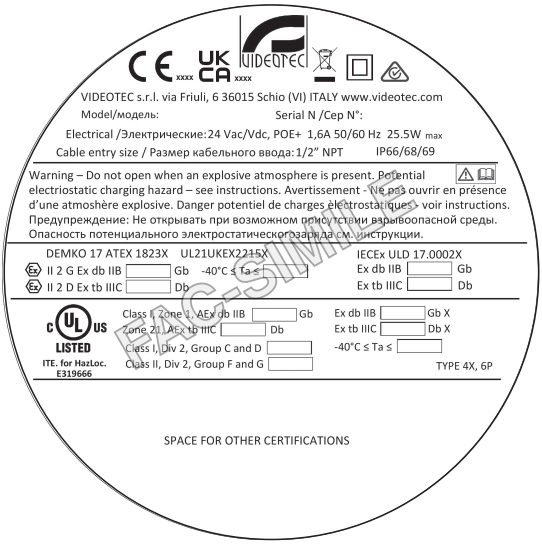

Fig. 3

Connections

The choice of connection must comply with local legislation in force.

Cable glands: select a cable gland in compliance with UL2225 with the following protection AEx d IIC and C22.2 with the following protection Ex d IIC in compliance with the marking of the product.
Conduit: it is necessary to install a sealing device within 50mm of the product input when the conduit is used.

Regulation references

UL 62368-1, 2nd Ed, 2014-12-01 (Audio/video, information and communication technology equipment Part 1: Safety requirements)

CAN/CSA C22.2 No. 62368-1-14, 2nd Ed, Issued: 2014-12-01 (Audio/video, information and communication technology equipment Part 1: Safety requirements)

UL 60079-0, 7th Edition, Explosive atmospheres - Part 0: Equipment - General requirements

UL 60079-1, 7th Edition, Explosive Atmospheres - Part 1: Equipment Protection by Flameproof Enclosures “d”

UL 60079-31, 2nd Edition, Explosive Atmospheres - Part 31: Equipment Dust Ignition Protection by Enclosure “t”

CSA C22.2 No. 60079-0:19, Explosive atmospheres - Part 0: Equipment - General requirements

CSA C22.2 No. 60079-1:16, Explosive Atmospheres - Part 1: Equipment Protection by Flameproof Enclosures “d”

CSA C22.2 No. 60079-31:15, Explosive Atmospheres - Part 31: Equipment Dust Ignition Protection by Enclosure “t”

4.8 Model identification

MAXIMUS MLX - CONFIGURATION OPTIONS									
	Voltage		**Light**		**Lens scattering angle**		**Connections**			
MLX	**2**	24Vdc/ 24Vac, PoE+	**8**	850nm	**3**	70°	**0**	Without cable, without cable gland	**A**	**A**
			W	white light						

Tab. 2

MAXIMUS MLX - CERTIFICATIONS AND MARKINGS			
Certification	**Marking**	**Ambient temperature**	**Cable input temperature**
ATEX	Ⓔx II 2 G Ex db IIB T6...T5 Gb Ⓔx II 2 D Ex tb IIIC T85°C...T100°C Db	-40°C ≤ Ta ≤ +55°C or +70°C	+82.3°C with Ta ≤ +55°C +97.3°C with Ta ≤ +70°C
IECEx	Ex db IIB T6...T5 Gb Ex tb IIIC T85°C...T100°C Db		
EAC Ex	1 Ex db IIB T6...T5 Gb X Ex tb IIIC T85°C...T100°C Db X		
KCs	Ex db IIB T6...T5 Gb Ex tb IIIC T85°C...T100°C Db		
INMETRO	Ex db IIB T6...T5 Gb Ex tb IIIC T85°C...T100°C Db		
UK Ex	Ⓔx II 2 G Ex db IIB T6...T5 Gb Ⓔx II 2 D Ex tb IIIC T85°C...T100°C Db		
Hazardous Location America	Class I, Zone 1, AEx db IIB T5...T4 Gb Zone 21, AEx tb IIIC T100°C...T135°C Db Class I, Div 2, Group C and D T5...T4 Class II, Div 2, Group F and G T5...T4	-40°C ≤ Ta ≤ +45°C or +70°C	+78.5°C with Ta ≤ +45°C +88.5°C with Ta ≤ +55°C +103.5°C with Ta ≤ +70°C
Hazardous Location Canada	Ex db IIB T5...T4 Gb X Ex tb IIIC T100°C...T135°C Db X Class I, Div 2, Group C and D T5...T4 Class II, Div 2, Group F and G T5...T4		

Tab. 3

5 Preparing the product for use

Before carrying out any type of intervention, read the "Safety rules" chapter of this manual.

5.1 Unpacking

When the product is delivered, make sure that the package is intact and that there are no signs that it has been dropped or scratched.

If there are obvious signs of damage, contact the supplier immediately.

When returning a faulty product we recommend using the original packaging for shipping.

Keep the packaging in case you need to send the product for repairs.

5.2 Contents

Check the contents to make sure they correspond with the list of materials as below:

- Illuminator
- O-ring replacement part kit
- Bracket kit
- Instruction manual

5.3 Safely disposing of packaging material

The packaging material can all be recycled. The installer technician will be responsible for separating the material for disposal, and in any case for compliance with the legislation in force where the device is to be used.

6 Installation

Before carrying out any type of intervention, read the "Safety rules" chapter of this manual.

We strongly recommend using only approved brackets and accessories during installation.

6.1 Installation options

The brackets supplied allow installation of the product in the positions illustrated below.

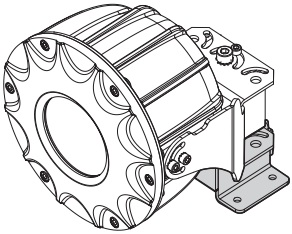

Fig. 4 Parapet mounting.

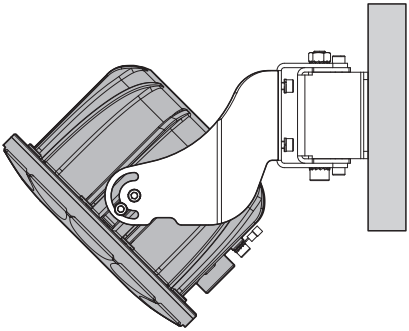

Fig. 5 Example of wall installation.

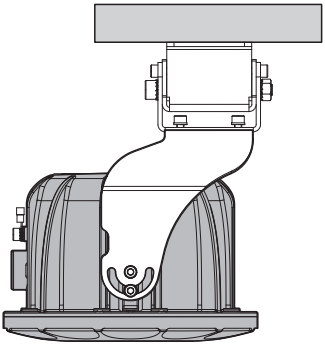

Fig. 6 Example of ceiling installation.

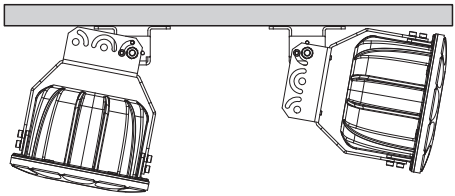

Fig. 7 Example of wall or ceiling installation.

6.1.1 Parapet mounting

The product can be installed on a railing.

Fasten the fastening support (01) to its final installation surface.

Attach the reinforcement support (02) to the housing support (03) using the M5 screws and the 5 washers supplied. Fasten the 2 supports assembled as such to the fastening support (01) using the M8 screw (05), the 8 toothed washers and a relevant spacer (04). Once the final position of the product is defined, fully tighten the M8 screw (05) and fasten the M5 screw (08) to block rotation.

The cable connected to the housing could hinder operations The illuminator can be rotated 180°.

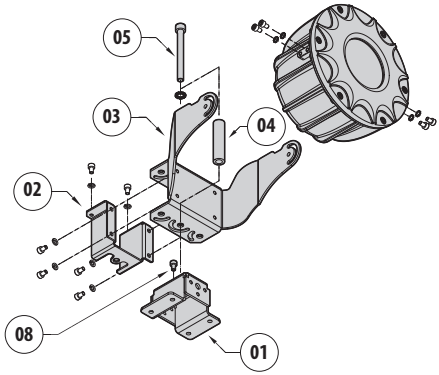

Fig. 8 Railing fastening with cable input upwards.

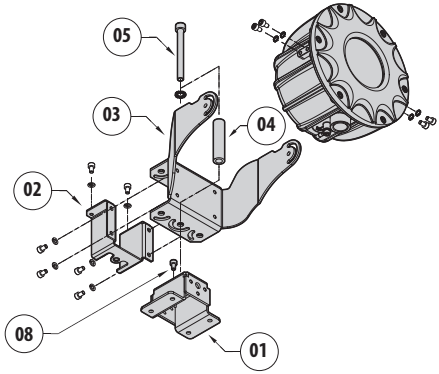

Fig. 9 Railing fastening with cable input downwards.

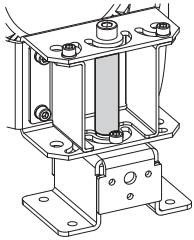

Fig. 10 Rear view of completed installation.

Pay attention to the fixing. Tightening torque: M5 screws, 9Nm (±0.5Nm). M8 screw, 16.5Nm (±0.5Nm).

6.1.2 Wall or ceiling fastening

The product can be installed on a railing or ceiling.

Fasten the fastening support (01) to its final installation surface.

Attach the housing support (03) to the fastening support (01) using the M8 screw (05), washers and nut. Once the final position of the product is defined, fully tighten the M8 screw (05) and fasten the M5 screws (08) to block rotation.

The cable connected to the housing could hinder operations The illuminator can be rotated 180°.

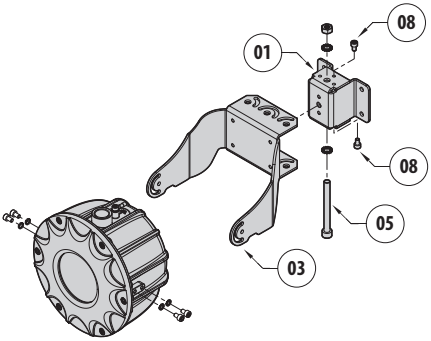

Fig. 11 Wall fastening with cable input upwards.

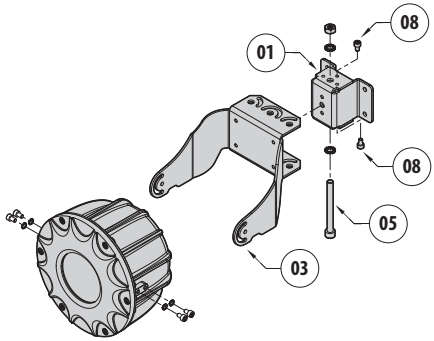

Fig. 12 Wall fastening with cable input downwards.

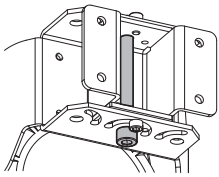

Fig. 13 Rear view of completed installation.

Pay attention to the fixing. Tightening torque: M5 screws, 9Nm (±0.5Nm). M8 screw, 16.5Nm (±0.5Nm).

6.2 Product opening

Before carrying out any type of intervention, read the "Safety rules" chapter of this manual.

Unscrew the fastening screws and remove the front cover from the housing body.

Screws properties

- Diameter/Screw pitch: M5x0.8
- Material: A4
- Screw head: ISO 4762
- Length: 8mm (0.3in)
- Yield stress (min): 450N/mm^2

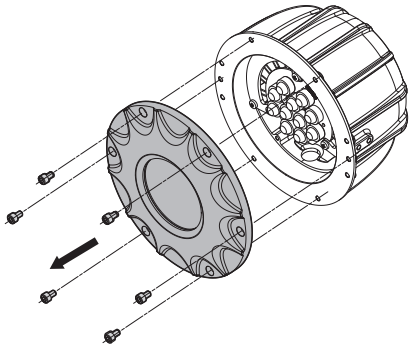

Fig. 14

6.3 Slide removal

Unscrew the 3 M4 screws to remove the slide.
Before removing the slide, check that cables are not fastened with a clip.

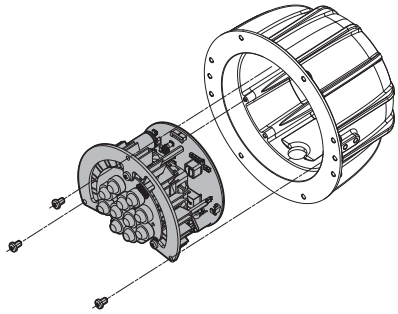

Fig. 15

6.4 Connector board description

BOARD DESCRIPTION		
Connec-tor/ Terminal	**Function**	**Terminals - Nominal section of the cables used**
J1	Power supply line (24Vac/24Vdc)	from 1.0mm^2 (17AWG) up to 2.5mm^2 (12AWG)
J5	I/O	from 0.2mm^2 (24AWG) up to 1.0mm^2 (17AWG)
J8	PoE+ power supply	–
F1	Fuse	–

Tab. 4

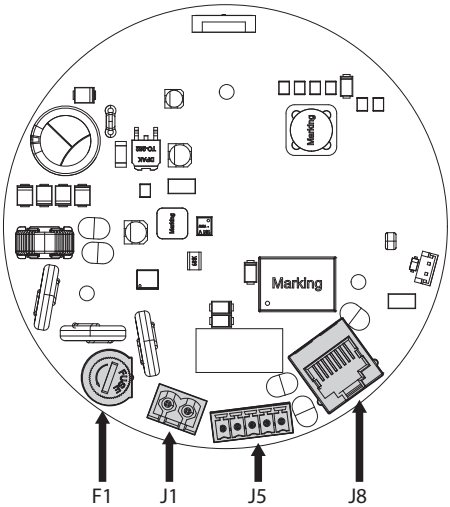

Fig. 16

6.5 Connecting the power supply

6.5.1 Connecting the power supply (24Vac/24Vdc)

Check that the power supply socket and cable are adequately dimensioned.

The polarity of the voltage, applied to the power terminal, is irrelevant.

The power supply cable must be covered by the silicone sheath (01) supplied. The silicone sheath must be fastened with the corresponding cable tie (02).

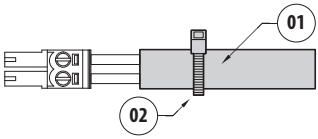

Fig. 17

The power supply cables should be connected to the power supply terminal of the housing board (J1, 6.4 Connector board description, page 18).

6.5.2 Connecting the power supply (PoE+)

The Ethernet cable shield must always be earthed via the connector. Always use a shielded RJ45 connector.

Use Ethernet cables with the following characteristics:

- STP (shielded)
- Category 5E
- Cable minimum section: 0.22mm² (24AWG).

The product can be powered using PoE+ (Power Over Ethernet) devices in compliance with the international standard for technological information IEEE 802.3at, using an Ethernet data cable Category 5E.

Maximum Ethernet cable length (category 5E): 100m.

The PSE (Power-Supplying Equipment) devices suitable for the product power supply must comply with the standard IEEE 802.3at (PoE+).

The Ethernet cable should be connected to connector RJ45 of the housing board (J8, 6.4 Connector board description, page 18).

Carry out the connections as described in the table (according to the standard specifications: TIA/EIA-568-B).

ETHERNET CABLE CONNECTION	
Pin number	**Core colour**
1	Orange-White
2	Orange
3	Green-White
4	Blue
5	Blue-White
6	Green
7	Brown-White
8	Brown

Tab. 5

6.6 Earthing equipotential connection

The equipotential connection must be carried out using an external cable with a minimum 4mm² section (11AWG).

Connect the cable for the earthing equipotential connection with the eyelet terminal supplied (suitable for cables with 4mm² (11AWG) up to 6mm² (9AWG) section).

Fasten the eyelet using the M5 screw and lock washer supplied.

Characteristics of the M5 screw:

- Material: A4
- Screw head: ISO 4762
- Length: 8mm (0.3in)
- Yield stress (min): 450N/mm²

CAUTION! The external equipotential connections must be set up through the eyelet on the outside of the product. Do not use as a protective terminal.

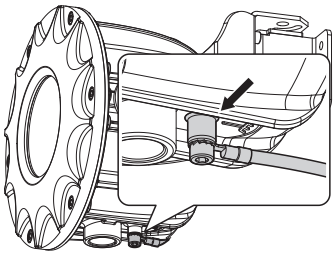

Fig. 18

6.7 LED groups enabling and Fault connection

LED GROUPS ENABLING AND FAULT CONNECTION		
Connectors	**Terminals**	**Description**
J5	1 (RL1A), 2 (RL1B)	Clean output contact enabled by Fault
	3 (A), 4 (B), 5 (COM)	LED groups enabling

Tab. 6

6.7.1 LED groups enabling

The product is equipped with two LED groups: group A and group B. It is possible to manage the switching on all, one or none of the LED groups, to adapt the light intensity to the scene. To select the units, wire the connector J5 as follows.

It is possible to enable the LED groups with jumpers directly on the connector or remotely by arranging suitable wiring.

- Enable groups A and B: no connection necessary.

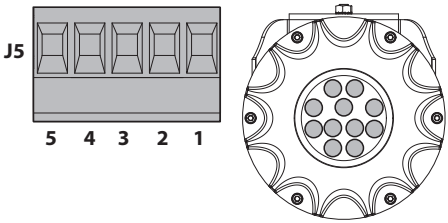

Fig. 19

- Enable group A only: install the connections as in the diagram below.

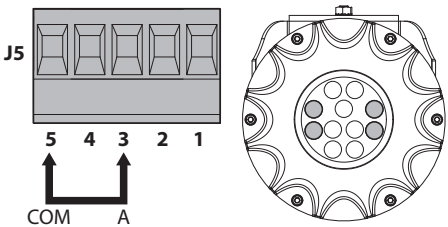

Fig. 20

- Enabling group B only: install the connections as in the diagram below.

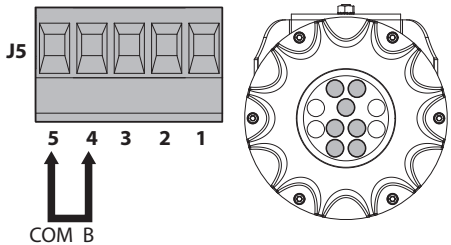

Fig. 21

- Turn off all LEDs: install the connections as in the diagram below.

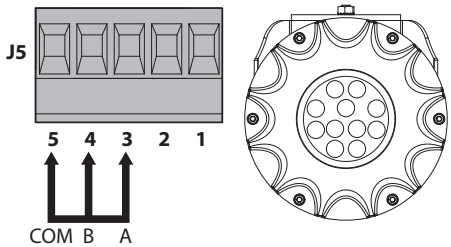

Fig. 22

- Remote control of LED groups is possible. See the example in the diagram below.

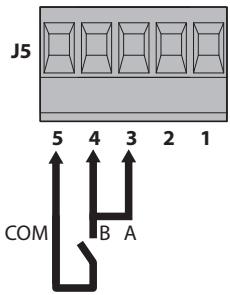

Fig. 23 Example of enabling / disabling both groups A and B.

6.7.2 Fault

The Fault can occur in high temperatures or in the event of a LED fault. In the event of a malfunction, the illuminator closes the normally open clean contact between RL1A and RL1B on terminals 1 and 2 of connector J5. If the malfunction persists, the contact remains closed. If the malfunction is resolved, the contact will open.

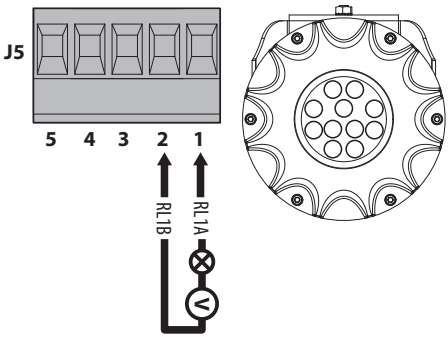

Fig. 24

6.8 Product closure

Test system operation for positive results before closing the product and allowing the presence of a hazardous atmosphere.

During opening and closure operations of the product, pay attention not to damage the flameproof joint.

Before closing the product, check the integrity of the O-ring gasket. If the sealing is damaged replace it with the one supplied.

Re-insert the slide and fasten the 3 previously removed screws.

Verify that there is no dirt or debris.

Arrange the cables so that they do not hinder closing of the front cover.

Insert the front cover in the housing body, keeping the closure holes between the cover and the body aligned.

Be very careful not to damage the O-ring gasket.

Screw back the previously removed screws.

Screws properties

- Diameter/Screw pitch: M5x0.8
- Material: A4
- Screw head: ISO 4762
- Length: 8mm (0.3in)
- Yield stress (min): 450N/mm^2

Pay attention to the fixing. Tightening torque: 9Nm (±0.5Nm).

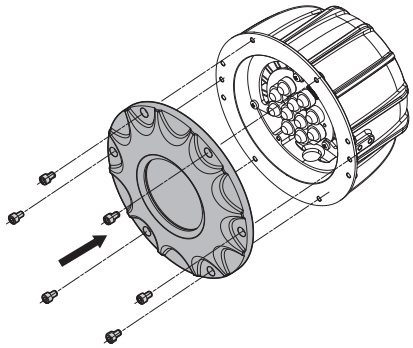

Fig. 25

7 Switching on

Ensure the unit and the other components of the system are appropriately closed to prevent contact with live parts.

Make sure that all parts are fastened down firmly and safely.

The unit is switched on by connecting the power supply.

To switch off the unit disconnect the power.

The partial switching on or complete switching off of the LEDs can be managed by selecting the LED groups (6.7 LED groups enabling and Fault connection, page 20).

8 Maintenance

Before carrying out any type of intervention, read the "Safety rules" chapter of this manual.

8.1 Routine maintenance

When contacting VIDEOTEC for assistance please provide the serial number and the identification code of the model.

8.1.1 Inspecting the cables

The cables should not show signs of damage or wear, which could generate hazardous situations. In this case, cable maintenance must be carried out.

8.2 Extraordinary maintenance

8.2.1 Fuse replacement

CAUTION! To ensure protection against the risk of fire, replace the fuse with one the same type and value. The fuse must only be replaced by qualified staff.

To maintain cULus Listed certification, the fuse must be UL Listed (OMEGA GT520222, BUSSMAN S507).

The used fuse is described below.

FUSE REPLACEMENT	
Supply voltage	**Fuse (F1)**
24Vac, 50/60Hz	T 2A H 250V 5x20
24Vdc	

Tab. 7

As an alternative, use an approved fuse featuring the same characteristics.

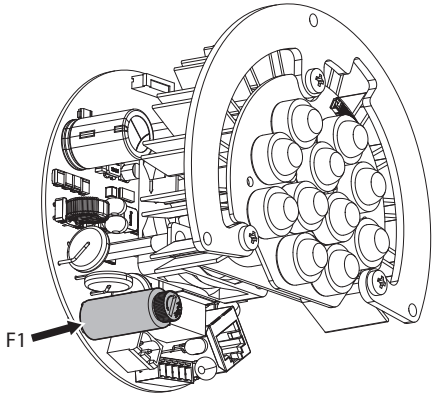

Fig. 26

8.2.2 Replacing the gasket

Replace the O-ring gasket of the product with the one supplied.

Open and close the cover as described in the chapters above.

Replace O-ring gasket paying attention to position it correctly.

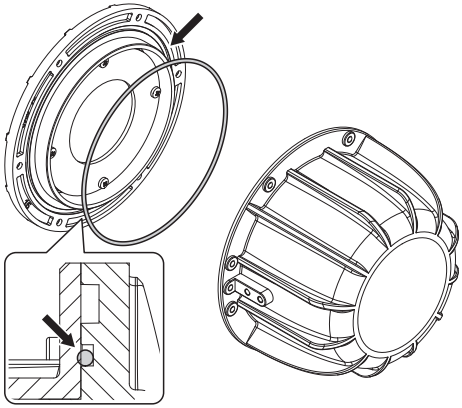

Fig. 27

9 Cleaning

Before carrying out any type of intervention, read the "Safety rules" chapter of this manual.

Frequency will depend on the type of environment in which the product is used.

9.1 Cleaning the glass window

Cleaning should be done with mild soap diluted with water.

9.2 Cleaning the product

The outside surface of the product must never be covered in more than 5 mm of dust.

The cleaning of the product should be carried out according to the instructions in this chapter in order to prevent accumulation of electrostatic charges.

The device should be cleaned using a damp cloth; compressed air must not be used.

10 Information on disposal and recycling

The European Directive 2012/19/EU on Waste Electrical and Electronic Equipment (WEEE) mandates that these devices should not be disposed of in the normal flow of municipal solid waste, but they should be collected separately in order to optimize the recovery stream and recycling of the materials that they contain and to reduce the impact on human health and the environment due to the presence of potentially hazardous substances.

The symbol of the crossed out bin is marked on all products to remember this.

The waste may be delivered to appropriate collection centers, or may be delivered free of charge to the distributor where you purchased the equipment at the time of purchase of a new equivalent or without obligation to a new purchase for equipment with size smaller than 25cm (9.8in).

For more information on proper disposal of these devices, you can contact the responsible public service.

11 Troubleshooting

Before carrying out any type of intervention, read the "Safety rules" chapter of this manual.

Contact an authorised support centre if the problems persist or you have any other issues that are not described here.

PROBLEM	**The product does not go on.**
CAUSE	Wrong cabling, broken fuse.
SOLUTION	Make sure the connections are correct. Check continuity of the fuse and, if faulty, replace it with the indicated model.

PROBLEM	**The illuminator reduces in intensity.**
CAUSE	In high ambient temperatures, the illuminator automatically reduces the brightness flow.
SOLUTION	Do not intervene. To reduce the temperature, the system will automatically restart the illuminator.

PROBLEM	**The illuminator flashes every 10s.**
CAUSE	LED fault.
SOLUTION	Contact the authorized service centre.

12 Technical data

12.1 General

Beam patterns: 70°, circular

Number of LED groups selectable: 2

LECC: The "LED Energy Consumption Control" technology allows the illuminator to withstand high temperatures and so ensure the LEDs operate correctly for the entire life of the product.

Illuminator with IR type LED

- Wavelength: 850nm
- LED: 11
- Viewing distance: up to 125m (410ft) with VIDEOTEC cameras with DELUX technology

Illuminator with white light LED

- Light color temperature: 6500K
- LED: 10
- Viewing distance: up to 125m (410ft) with VIDEOTEC cameras with DELUX technology

12.2 Mechanical

AISI 316L stainless steel construction

External shot peened and electro-polished surfaces

Supports for wall, ceiling or parapet installation

Cable entry: 1 hole, 1/2" NPT

Unit weight:

- 6.5kg (14.3lb)

12.3 Electrical

Supply voltage/Current consumption

- 24Vac, 1.6A
- 24Vdc, 1.6A
- PoE+ (IEEE 802.3at)

Power consumption:

- 25.5W

12.4 I/O interface

Number of inputs for LED groups management: 2

Fault Relay: 1A, 30Vac/60Vdc max

12.5 Environment

For indoors and outdoors installation

Operating temperature: from -40°C (-40°F) up to +65°C (149°F)

Certification temperature: from -40°C (-40°F) up to +70°C (158°F)

Relative humidity: from 5% up to 95%

12.6 Certifications

Electrical safety (CE): EN60950-1, IEC60950-1, EN62368-1, IEC62368-1

Electromagnetic compatibility (CE): EN61000-6-3, EN61000-3-2, EN61000-3-3, EN50130-4, EN55032 (Class B)

RoHS (CE): EN IEC 63000

Outdoor installation (CE): EN60950-22, IEC60950-22

Photobiological safety (CE): EN62471, IEC62471

IP protection degree (EN/IEC60529): IP66, IP67, IP68 (2 hours, 5m (16ft)), IP69

Vibration test: EN50130-5, EN60068-2-6

UL certification (UL62368-1 CAN/CSA C22.2 No. 62368-1-14): cULus Listed

Electromagnetic compatibility (North America): FCC part 15 (Class B), ICES-003 (Class B)

Level of protection Type (UL50E): 4X, 6P

RCM (Australian and New Zealand Regulatory Compliance Mark)

12.7 Certifications - Explosion-proof applications

ATEX (EN IEC 60079-0, EN 60079-1, EN 60079-31)

IECEx (IEC 60079-0, IEC 60079-1, IEC 60079-31)

EAC EX (TR CU 012/2011)

INMETRO (ABNT NBR IEC 60079-0, ABNT NBR IEC 60079-1, ABNT NBR IEC 60079-31)

KCs (Employment and labor department 2021-22)

UL listed for USA (UL 60079-0, UL 60079-1, UL 60079-31)

UL listed for Canada (CAN/CSA-C22.2 NO. 60079-0, CAN/CSA-C22.2 NO. 60079-1, CAN/CSA-C22.2 NO. 60079-31)

12.8 Certifications - Marine applications

Lloyd's Register Marine Type Approval certification (the product requires the filter accessory FM1010 if powered in 24Vac or 24Vdc):

- Test Specification Number 1 (ENV1, ENV2, ENV3, ENV5)

Electromagnetic compatibility: EN60945

Salty fog resistance: EN60068-2-52

Tested at 70°C (158°F) for 16 hours in compliance with EN60068-2-2

13 Technical drawings

The indicated measurements are expressed in millimetres.

WALL OR CEILING FASTENING

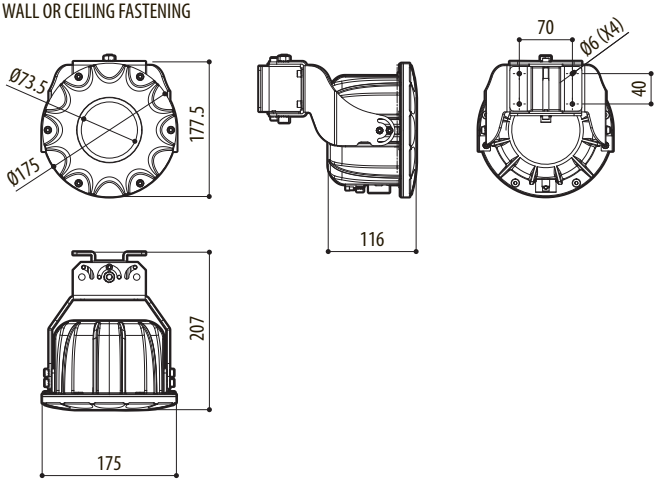

PARAPET MOUNTING

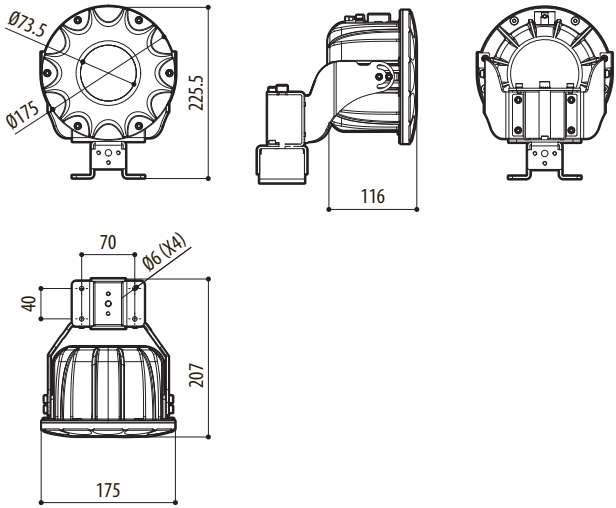

Fig. 28 MAXIMUS MLX.

Headquarters Italy VIDEOTEC s.r.l.
Via Friuli, 6 - I-36015 Schio (VI) - Italy
Tel. +39 0445 697411 - Fax +39 0445 697414
Email: info@videotec.com
www.videotec.com

Headquarters Italy VIDEOTEC s.r.l.
Via Friuli, 6 - I-36015 Schio (VI) - Italy
Tel. +39 0445 697411 - Fax +39 0445 697414
Email: info@videotec.com
www.videotec.com

MNVCMLX_2222